R22 Regulation *Subject code:4E2AK*

TKR COLLEGE OF ENGINEERING AND TECHNOLOGY

(Autonomous, Accredited by NAAC with 'A+' Grade)

B.Tech II Semester Supplementary Examinations, June 2026

COMPUTER AIDED ENGINEERING GRAPHICS

(ECE)

Maximum Marks: 60 Date: 17.06.2026 Duration: 3 hours

Note: 1.This question paper contains two parts A and B.
2. Part A is compulsory which carries 20 marks. Answer all questions in Part A.
3. Part B consists of 5 Units. Answer any one full question from each unit.
4. Each question carries 10 marks and may have a, b, c, d as sub questions.

Part-A

All the following questions carry equal marks (10X1M=10 Marks)		Marks	CO	BTL
1.a	Define Eccentricity.	1M	1	L1
b	Define a Cycloid.	1M	1	L1
c	Initial work and construction lines are drawn using _____ pencil.	1M	2	L1
d	In II quadrant, the front view will be _____ the reference line.	1M	2	L1
e	What is meant by pyramid?	1M	3	L1
f	Define a cone.	1M	3	L1
g	When the surfaces of a solid are laid out on a plane, the figure obtained is called its _____	1M	4	L1
h	Every line on the development of surfaces must be the _____ of the corresponding edge on the surface.	1M	4	L1
i	A line is perpendicular to vertical plane. Its vertical trace coincides with its _____ view.	1M	5	L1
j	If a line has one of its ends in the vertical plane. Its vertical trace coincides with the _____	1M	5	L1

Part-B

Answer All the following questions. (5X10M=50Marks)		Marks	CO	BTL
2	Construct a scale of 1:40 to read meters, decimeters and centimeters and long enough to measure up to 6m. Mark a distance of 4.76m on it.	10M	1	L2
	OR			
3	Draw an ellipse when the distance of its focus from its directrix is 50mm and eccentricity is 2/3. Also draw a tangent and a normal to the ellipse at a point 70mm away from the directrix.	10M	1	L2
4	Draw the projections for the following points keeping the distance between the projectors as 25mm on the same reference line. Point A on HP and 30mm in front of VP Point B 50mm below HP 30mm behind VP Point C 35mm below HP on VP Point D 50mm below HP 20mm in front of VP Point E on HP 50mm behind VP	10M	2	L2

	OR			
5	Draw the projections of a circular plane with a 50mm diameter, resting on a point A on its circumference in the HP such that its surface is inclined at 30° to HP and it is inclined to VP at 45° draw its projections.	10M	2	L2
6	A cylinder of base diameter 30 mm and axis length 60 mm is inclined to H.P at $30^0$and its axis is inclined to V.P at 45^0 . Draw its projections.	10M	3	L2
	OR			
7	A pentagonal prism of base side 30 mm and axis length 65 mm is inclined to H.P at 30°and its axis is inclined to V.P at 45° draw its projections.	10M	3	L2
8	A pentagonal prism, having a base 30mm side and 70mm long axis is resting on its base on H.P such that one of its rectangular surfaces is parallel to V.P. It is cut by an auxiliary inclined plane at 45^0 and passes through the midpoint of the axis. Draw the developments of truncated prism.	10M	4	L2
	OR			
9	A hexagonal prism, edge of base 20 mm and axis 50 mm long, rests with its base on HP such that one of its rectangular faces is parallel to VP. It is cut by a plane perpendicular to VP, inclined at 45° to HP and passing through the right corner of the top face of the prism. Develop the lateral surface of the prism.	10M	4	L2
10	Draw the front view, top view and side view of the figures shown below. All dimensions are in mm. 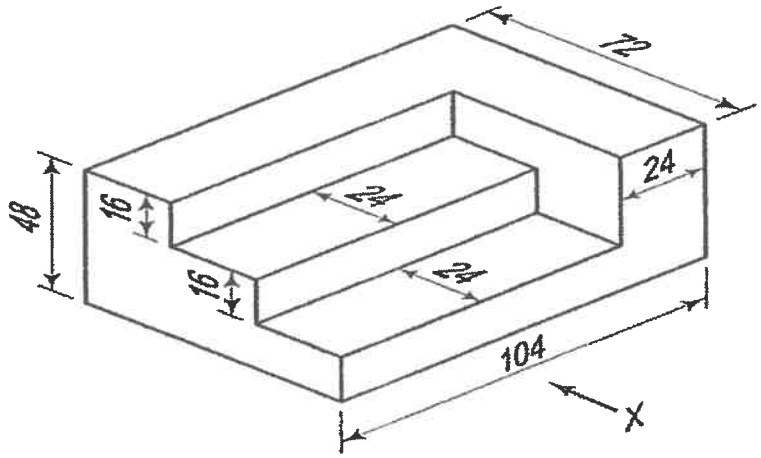	10M	5	L2
	OR			
11	Draw the front view, top view and side view of the figures shown below. All dimensions are in mm	10M	5	L2

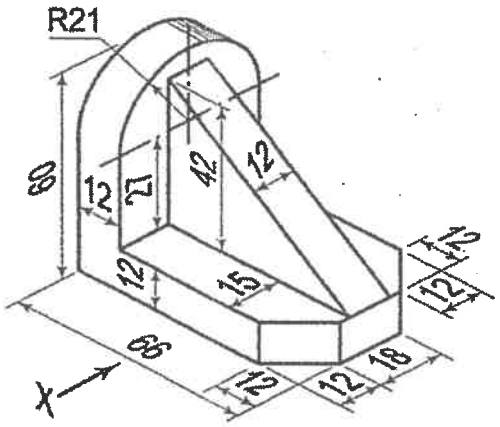
R21
60
12
27
42
12
12
15
12
12
66
12
12
18
X